MS SOLAR 3
52 MW PV PLANT
Sumrall Mississippi

Power Plant Controller

	Department	Responsible	Sign	Date
Compiled	IT2884	G. Torresan		08/02/18
Approved	IT2884	D.Fortugno		08/02/18

We reserve all rights in this document and in the information contained therein. Reproduction,use or disclosure to third parties without express authority is strictly forbidden.
©ABB S.p.A. Power Grids Division

Revision History

Rev.	Date	Author	Description
1	12/05/17	G.Torresan	First Issue
2	08/02/18	G.Torresan	Leakage on Voltage Regulation

We reserve all rights in this document and in the information contained therein. Reproduction,use or disclosure to third parties without express authority is strictly forbidden.
©ABB S.p.A. Power Grids Division

INDEX

1 PLANT CONTROL 4

1.1 PLANT CONTROLLER 4

1.1.1 PLANT CONTROLLER ARCHITECTURE 4

1.1.2 POI MEASUREMENT ACQUISITION 5

1.1.3 THE LIBRARY P_CONTROL 5

1.1.4 THE LIBRARY Q_CONTROL 6

1.1.5 DISPATCHING 10

We reserve all rights in this document and in the information contained therein. Reproduction,use or disclosure to third parties without express authority is strictly forbidden.
©ABB S.p.A. Power Grids Division

1 PLANT CONTROL

1.1 PLANT CONTROLLER

In the following chapters will be described the features of the Plant Controller System.
The scope of a centralized control system is to fulfill the requirements defined by the DNO/TSO at the POI level, acting on the generators which are spread into the Solar Plant in a way so that losses are minimized, using the variables that are available to be controlled and taking into account the capability limits of each generator.

1.1.1 Plant Controller Architecture

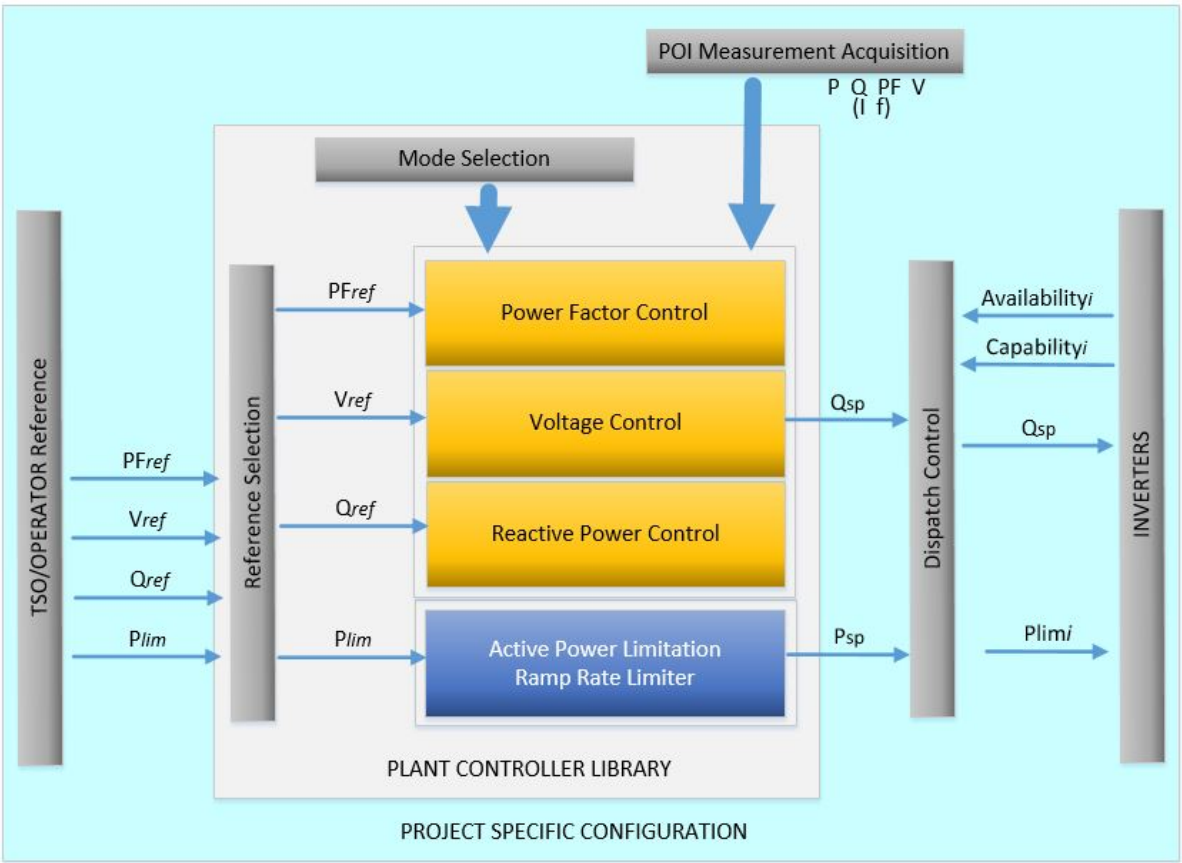

Figure 5-1 Plant Controller Architecture

Figure 5-1 represents the architecture of the plant controller and how it interfaces to external elements such as the network operator, the POI and inverter modules.
It must be able to exchange information with them and more specifically must perform a set of operations in line with the choices of an operator that acts as an interface HMI as a SCADA and achieve the following:

- Read measurements from the POI
- Read any requests of TSO / DNO
- Read any references inserted by an operator

We reserve all rights in this document and in the information contained therein. Reproduction,use or disclosure to third parties without express authority is strictly forbidden.
©ABB S.p.A. Power Grids Division

- Choose a reference among those available that in general are those described previously or reference "automatic" generated in the measures to POI
- Working in accordance with a selected operating mode
- Act as a function of the above and provide outputs in terms of SET POINT of active and reactive power to be supplied to the individual inverter modules.

The Plant Controller runs on an ABB PLC of the AC500 family.
The HMI is realized through the ABB MicroSCADA software, running on a Server computer.
The plant controller software is organized around two libraries for ABB AC500 PLC, developed in Codesys environment that contains the Active and Reactive Power control loop.
The advantage of using the library is that a designer uses it as a "Black Box" that can interact only with inputs and outputs of it, so the advantage is in terms of simplicity and usability.
The libraries in question are therefore:

1. Library P_Control, which realizes the control of active power (only power limitation)
2. Library Q_Control that realizes the control of reactive power

In the previous figure the blue colored blocks are those representing the active power control (P_CONTROL), while the yellow blocks are the ones representing the reactive power control (Q_CONTROL).

1.1.2 POI Measurement Acquisition

The Plant Controller needs the following data from the point of interconnection to the grid:

- Voltage.
- Current.
- Active Power.
- Reactive Power.
- Frequency.
- Power factor.

These data will be acquired directly from the AC500 PLC through the Ethernet line using the Modbus TCP protocol.

1.1.3 The Library P_CONTROL

With regards to the provision of active power, the following requirement are satisfied:

1. Limitation of the active power generated:
   for instance the TSO require a limitation to 70% that means that the plant at most must produce 70% of its nominal active power.
2. Limitation of the ramp for the supply of active power (MW / min).

We reserve all rights in this document and in the information contained therein. Reproduction,use or disclosure to third parties without express authority is strictly forbidden.
©ABB S.p.A. Power Grids Division

1.1.3.1 Functional Description P_CONTROL

In order to fulfill the 1 and 2 requirement (indicated in the previous chapter) maximizing the active power production, it has been developed the following logic:

P LIMIT

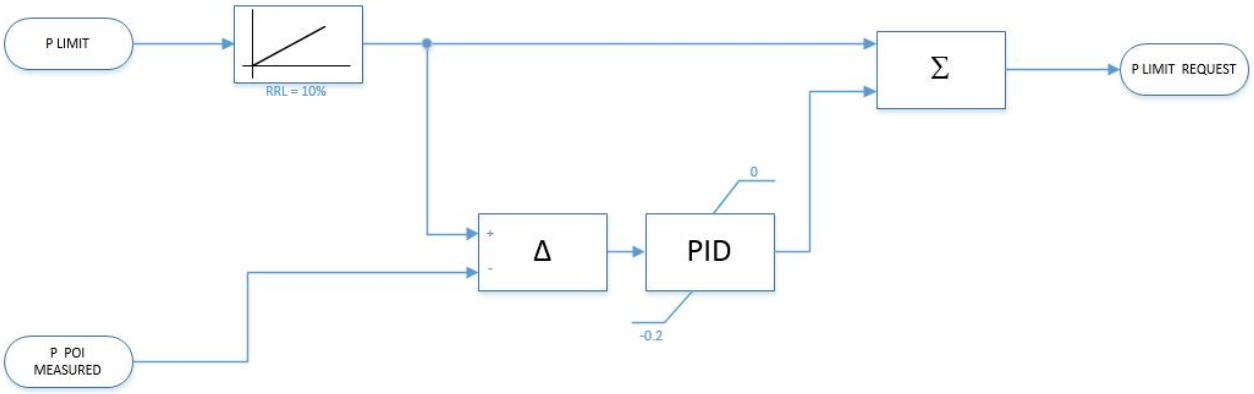

Being Inverter dynamically representable as a static machine, it would act instantly, injecting a quantity of active power in the grid that could compromise the stability of the network. To avoid this, at the input of the loop it has been realized a RAMP RATE LIMITER acting on the SET POINT SIGNAL that will be sent to the Inverters.

The value of the active power limit, can be set from:

1. Remote, from the TSO, by means of a Modbus TCP connection;
2. Local, inserted by the Operator through the S+ HMI.

1.1.4 The Library Q_CONTROL

To ensure the quality of service some TSO require that active users connected to the grid are able to provide certain network services in addition to the power limitation. These services are related to the possibility of injecting/adsorbing reactive power to participate in control of Voltage in 3 different ways:

1. Control Q at POI.

2. Control PF at POI.

3. Control V at POI.

The absorption and release of reactive power, in these cases, is aimed at limitation of overvoltage / under voltage caused by the generator itself as a result of release of active power.
At the inverter level a reactive power reference signal can be received from a centralized control system by one of three ways (control V, Q or PF): this signal should however be coherent with

We reserve all rights in this document and in the information contained therein. Reproduction,use or disclosure to third parties without express authority is strictly forbidden.
©ABB S.p.A. Power Grids Division

the inverter capability diagram, in order to avoid the centralized control system to issue an order that is not going to be respected.
Moreover the operator can choose one of these 3 mode selection using the SCADA interface as done for the active power limit.

To increase the Q control management, the capability to manage the insertion of a capacitor banks has been added in the Plant Controller Q control management.

1.1.4.1 Functional Description Q CONTROL

The scope of this mode is to Control the Reactive Power at POI level in a closed loop as shown in this diagram:

Q CONTROL

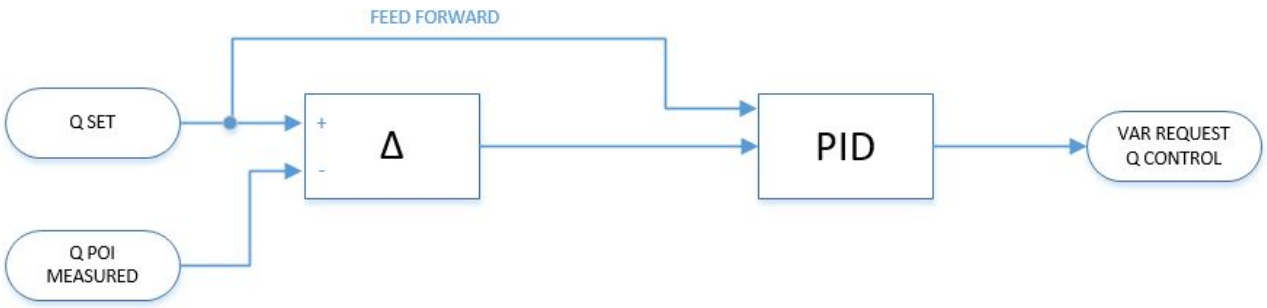

We reserve all rights in this document and in the information contained therein. Reproduction,use or disclosure to third parties without express authority is strictly forbidden.
©ABB S.p.A. Power Grids Division

1.1.4.2 Functional Description PF CONTROL

The scope of this mode is to Control the Power Factor at POI level in a closed loop:

PF CONTROL

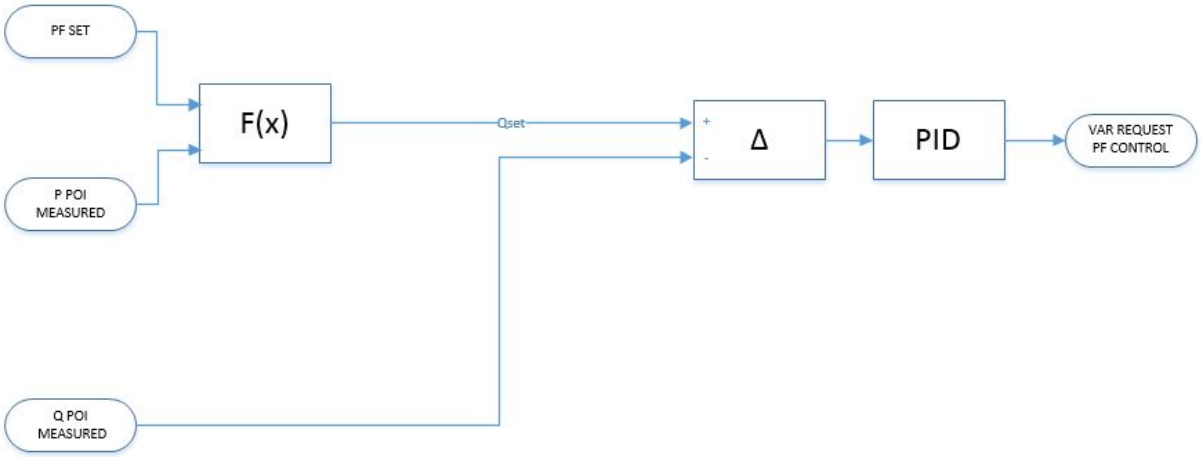

1.1.4.3 Functional Description V CONTROL

To participate in Voltage regulation, the Plant Controller is provided to a mode of regulation that control directly the value of Voltage at POI, without the "help" of the PF control or Q control.

V CONTROL

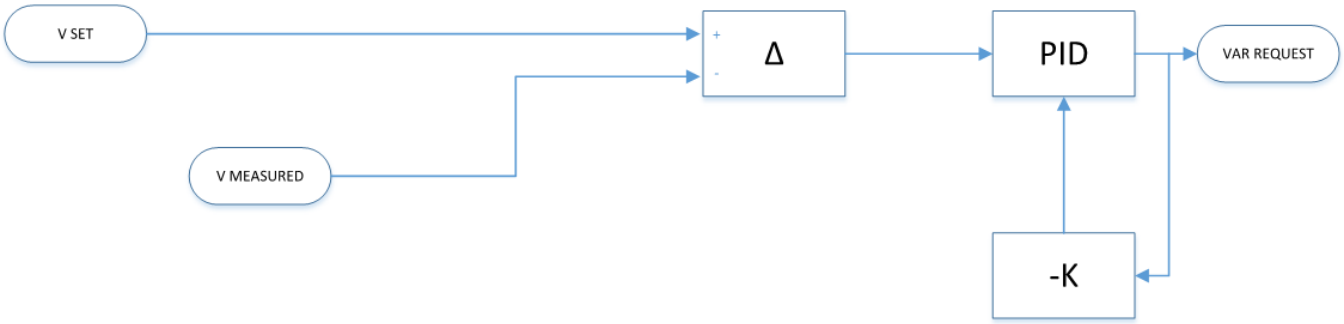

If the voltage dead band logic is enabled the voltage regulation will act in this way:

When the voltage recovers inside the dead band and after the settable delay (expressed in sec), the reactive power output adjusts to the minimum value maintaining the voltage within the dead band. This adjustment is done by the K parameter that decrease the reactive power output. About K parameter, the bigger this value is, the faster will be the action of decreasing the reactive power.

If the voltage dead band logic is disabled, after the voltage recovers, the reactive power output remains constant.

We reserve all rights in this document and in the information contained therein. Reproduction,use or disclosure to third parties without express authority is strictly forbidden.
©ABB S.p.A. Power Grids Division

1.1.4.4 Capacitor Bank Management

The plant has two capacitor banks, of 4MVar each one, the plant controller, if the capacitor bank management is in remote mode (not operated locally), will close the breaker for the insertion of the first capacitor bank, once the required reactive power is above 4MVar for at least 2 minutes. The second capacitor bank will be inserted when the required power is above 8MVar (for at least 2 minutes).
When the reactive power go down till 7.8Mvar (for at least 1 min) the second capacitor bank will be disconnected.
When the reactive power go down till 3.8Mvar (for at least 1 min) the first capacitor bank will be disconnected.
When a capacitor bank is disconnected, it will not be possible reinsert it for 5 minutes.

We reserve all rights in this document and in the information contained therein. Reproduction,use or disclosure to third parties without express authority is strictly forbidden.
©ABB S.p.A. Power Grids Division

1.1.5 Dispatching

The plant Controller reads via MODBUS TCP / IP data from Inverters and depending on these and on the result of The Control module, dispatches the set point to the inverters in order to fulfil the request ensuring that they don't exceed their capability curve.

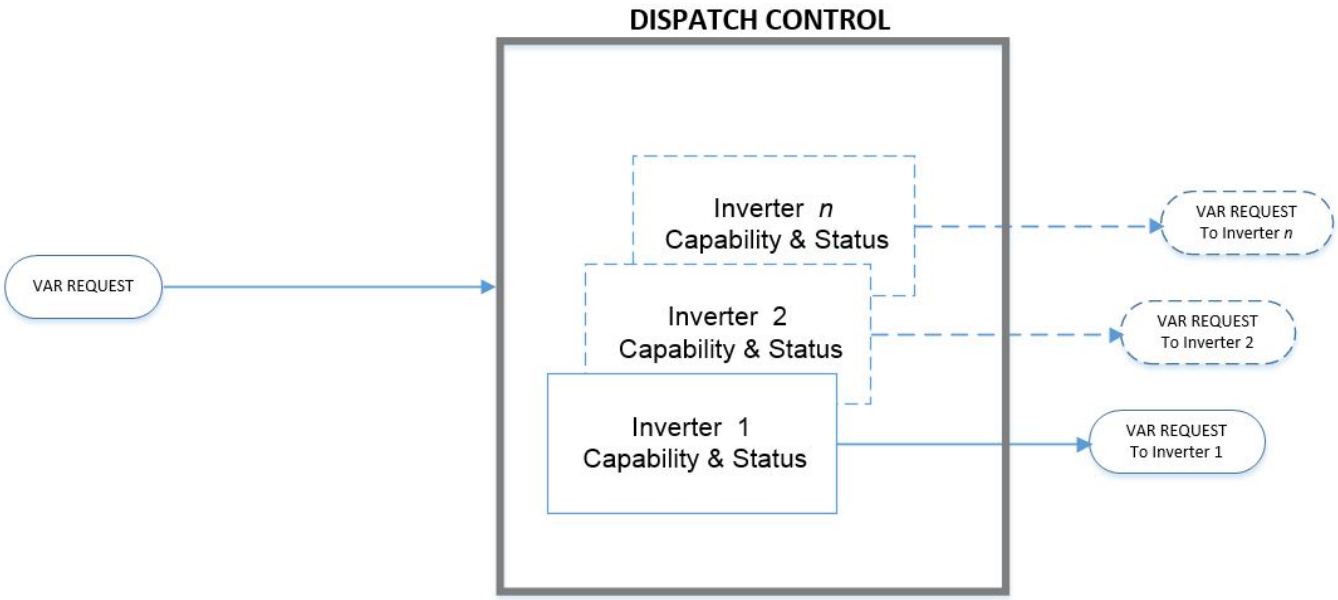

Moreover the Operator using the Plant Controller is able to manage:

- The P/Q priority criteria of the whole Plant.
- The switching on and off of the inverters using their main status world.

We reserve all rights in this document and in the information contained therein. Reproduction,use or disclosure to third parties without express authority is strictly forbidden.
©ABB S.p.A. Power Grids Division